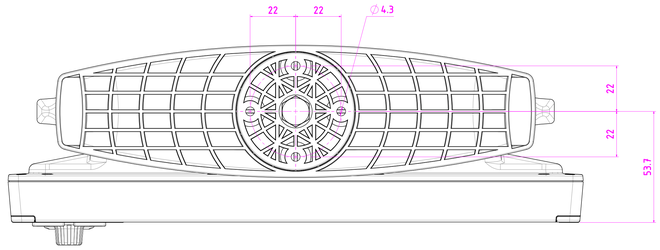

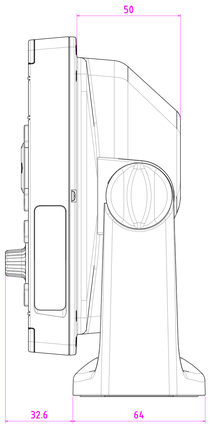

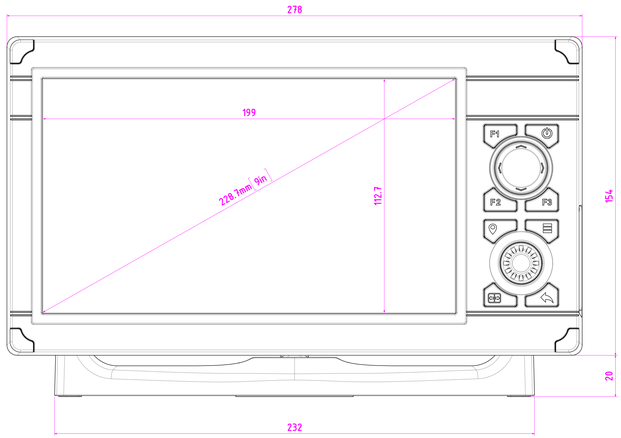

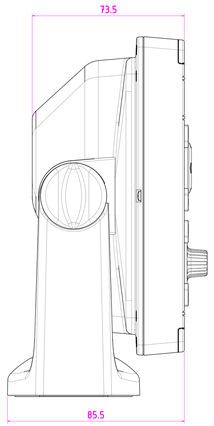

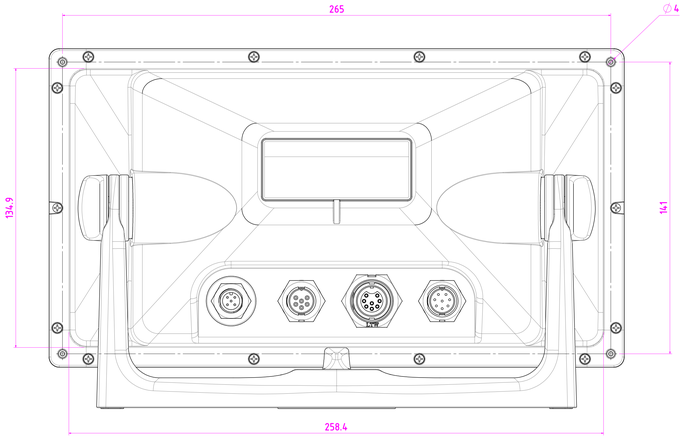

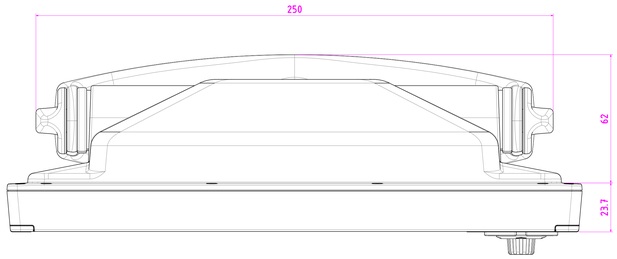

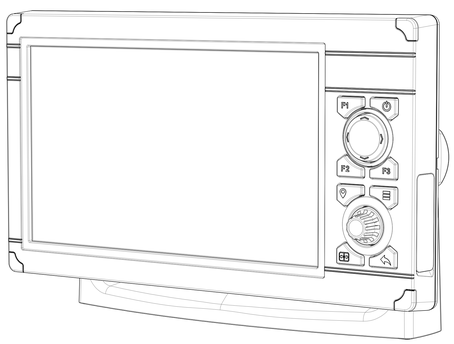

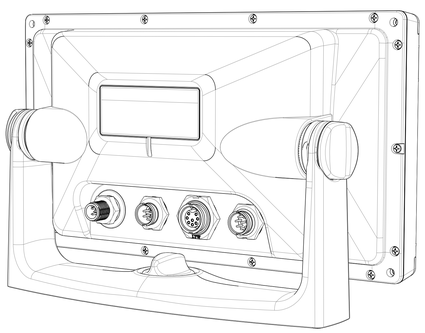

AS / CAD	Project: H449 - 9" UNIT	Contents: GENERAL LAYOUT
TWS	T.W.S. S.r.l.U. COMPANY CONFIDENTIAL Not to be disclosed to or used by any person who has not received prior written authorization from T.W.S. Any such disclosure or use may subject to civil and criminal penalties as provided by law	Code: File: H449AS00A1_2017-10-23.SLDDRW
		Date: Oct. 23, 2017 Sheet: 1 of 1 Units & tolerance: mm Scale = 1:1